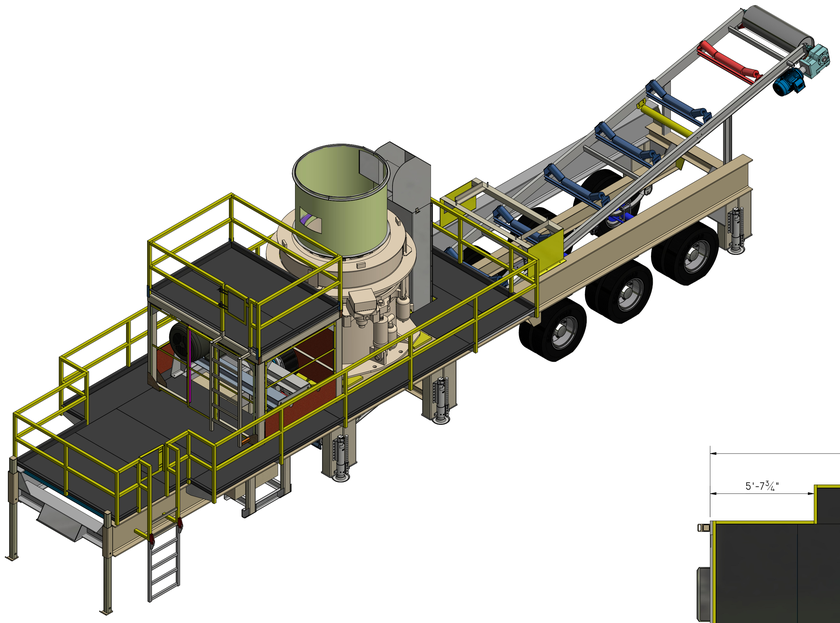

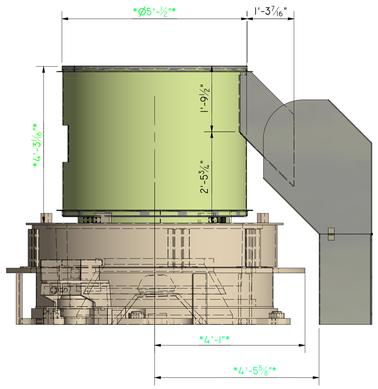

DETAIL Y
SCALE 1 / 20

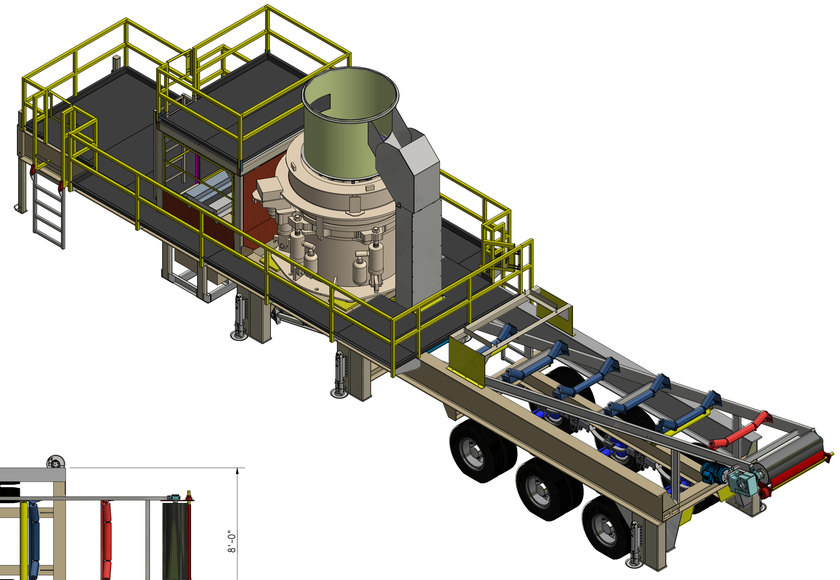

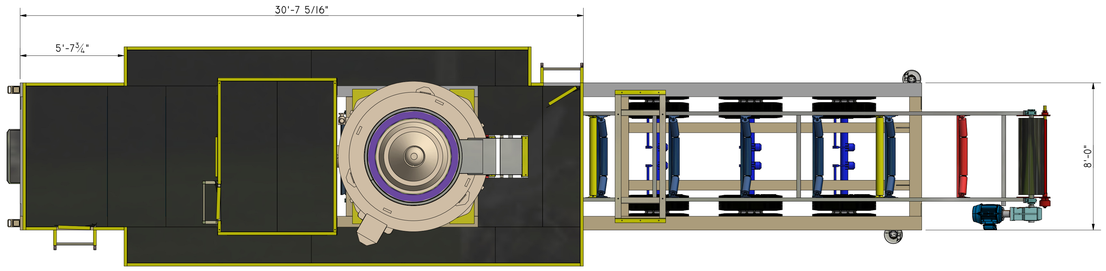

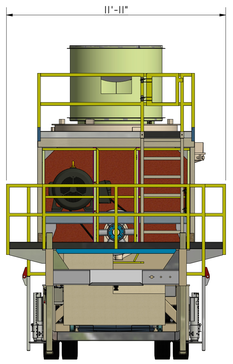

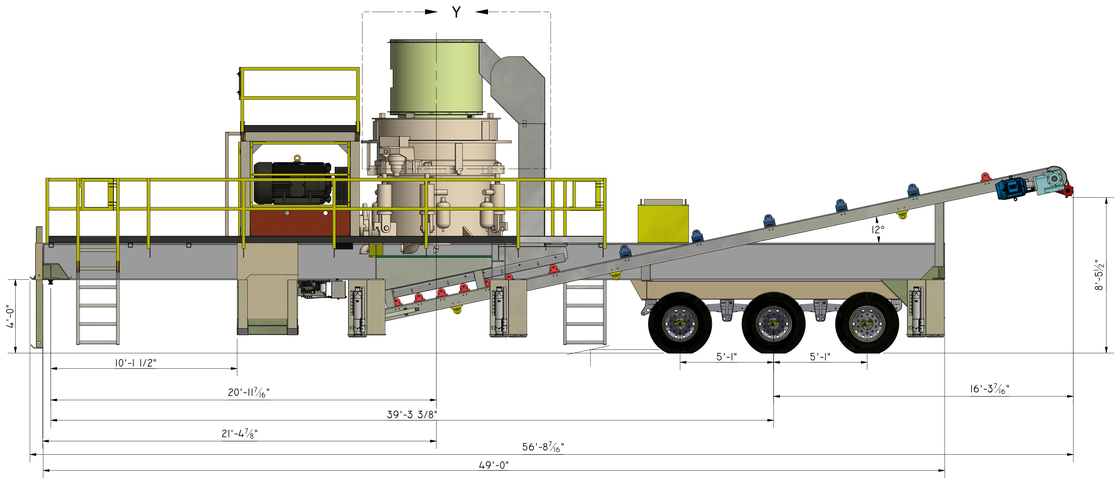

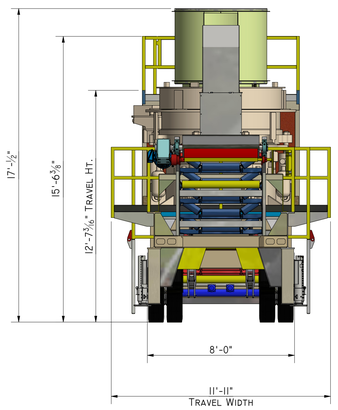

HP-400 Open Circuit Rear Discharge

PIN WT. 38,800 LBS

TOTAL WT.
91,700 LBS

AXLE WT. 52,900 LBS

NOR-TECH FABRICATION SANDBLASTING/PAINTING

DRAWN Jon Phillips DATE 1/14/2014

DESIGN NOR-TECH SCALE NTS

THIS PRINT IS THE PROPERTY OF NOR-TECH FABRICATIONS
AND IS TO BE USED FOR INSIDE FABRICATION PURPOSE ONLY
OUTSIDE DISTRIBUTION IS BY PERMISSION ONLY

DRAWING TITLE HP-400 Cone Plant
General Arrangement

DRAWING NUMBER
NTS-5144 19-F018

REVISION
0

DATE: 1/14/2014 LOCATION: \\NORTECH1\NorTech Data\Mechanical Design\Inventor Files\Customers\Miller Machine\HP-400 Miller 19-F018\Miller Machinery HP-400 19-F018.idw